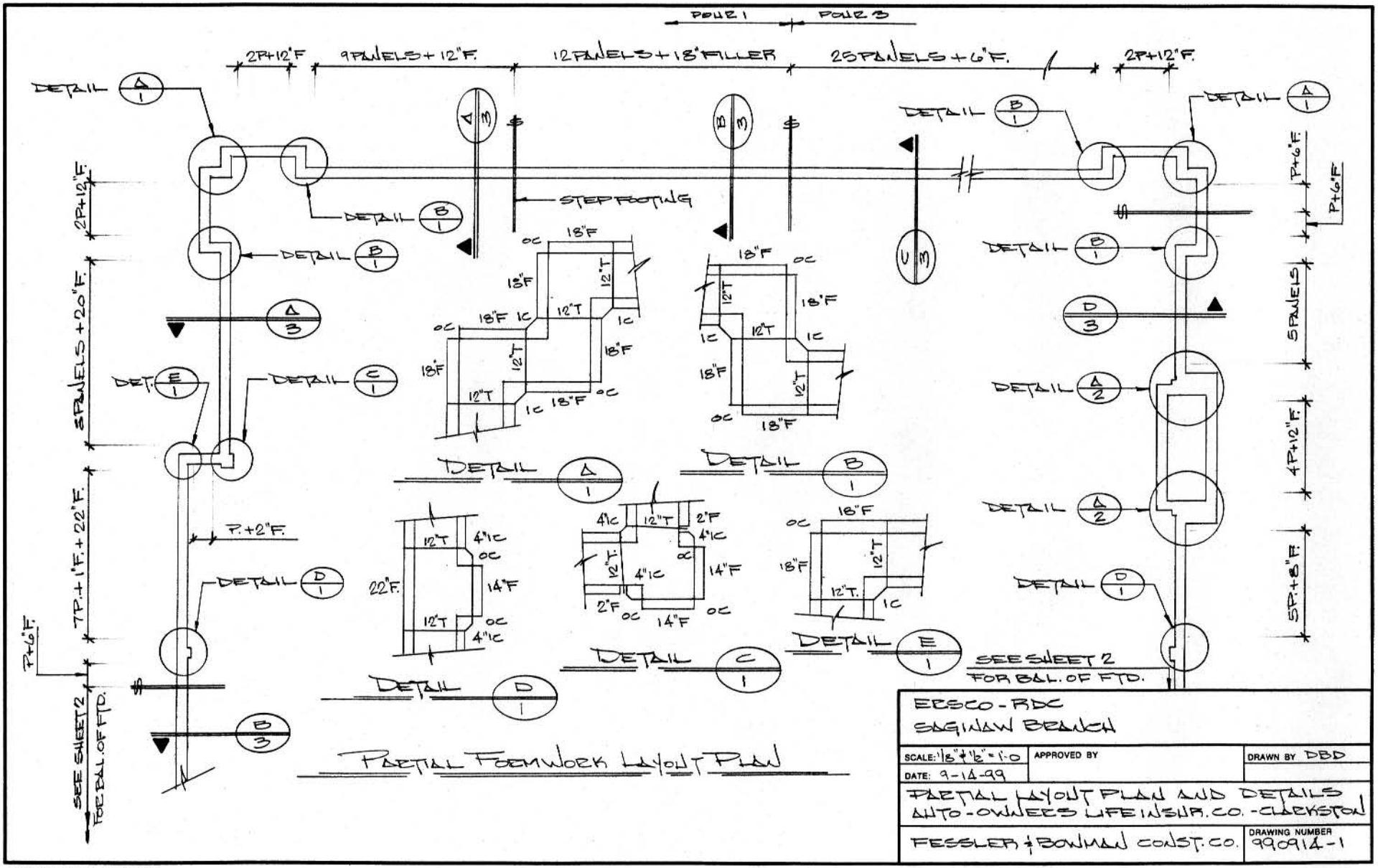

NATIONAL PRINTRAST NO. 165A-11X17

DETAIL BY DESIGN

HARRY STAMATY
6044 Tipperary Dr.
Galloway OH 43119

OFFICE: 614-870-5144
FAX: 614-870-6455
CELL: 614-588-2881

www.detailbydesign.com